GPU 28,5Vdc

Power	23 kVA
Voltage	28,5Vdc
Power Factor	1
Frequency	CC - DC
Output 28,5Vdc	N°1
Current	800A

HIGH TECHNOLOGY
CERTIFIED QUALITY
USER FRIENDLY CONTROLS

ENGINES

FPT (IVECO)

Stage 0	20F/23NE @2000rpm
Stage V	20F/23TEV@2000rpm

CUMMINS

Stage III A	20C/23E @2000rpm
Stage V	20C/23EV@2000rpm

DEUTZ

Stage 0	18D/23NE@1800rpm
Stage V/4F	20D/23EV @2000rpm

KOHLER

Stage V	18KO/23EV@1800rpm

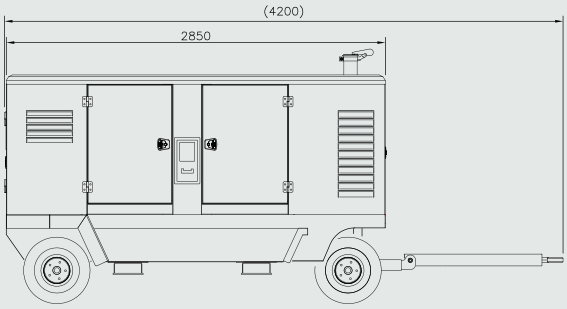

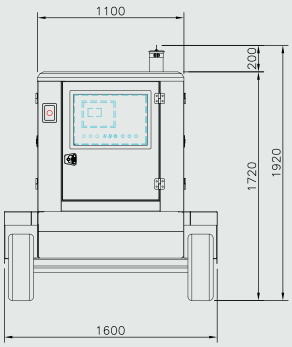

Dimensions are shown in mm

Pictures may not show the actual product due to presence or absence of items

bertoli POWER UNITS

Bertoli provides robust, easy to use and maintain **400Hz diesel ground power units from 60 to 180kVA**. All models feature a user-friendly electronic device for the GPU management through which operators are able to control engine dynamics (low/rated speed, etc.) and energize the desired output(s).

Sound-and weatherproof canopies and trailers are designed and manufactured in-house.

Special care is devoted to quality of materials and processing. Product look sober and are an optimal matching of essentiality and maximum functionality, conceived to facilitate end users in operating the machine and get the best out of their technical mechanical potential.

Via Tomasicchio, 3 • 43013 Langhirano PR
+39 0521 861386 • info@bertolisrl.it

ENGINE

FPT (IVECO)	NEF45 - Stage 0 F34 - Stage V/T4F
Deutz	BF4M stage 0 TCD3.6 (Stage V)
Cummins	QSB 4.5 stage IIIA
Type	4 stroke, 4 cylinder, turbo with intercooler
Fuel	Diesel
Speed	2000 or 1846 rpm - electronic governor
Cooling	Water cooling with radiator and blower fan
Starting	Electric starting 24Vdc Batteries 2x12Vdc - 100Ah
Sensors	Oil pressure, Water temperature, fuel level, alternator battery charger

DC OUTPUT

N° of outputs	1
Voltage	28,5 Vdc
Power output	800A continuous 1200A 90 sec 2000A max 5 sec
Cables	2x150(mmq), tinned, extra flexible, length 10 meters
Plug	3 poles, standard rubber type

CONFIGURATION

Chassis	Structural steel base equipped with vibration dampers, lifting facilities fitted..
Trailer	Strong frame in welded steel sections; two axle trailer with steerable front wheels 180°, fix drawbar Parking brake automatically operated when the draw bar is in vertical position Cable storage compartment on both sides of GPU with easy access and appropriate size to cable length
Canopy	Weatherproof Anticorrosive treatment RAL 1004 (other colour on request) Large doors for inspection and maintenance Yellow flashing light on top Size signallers. Adjustable service light Control panel lighting Interior lighting for maintenance Sound level 75 dB(A) @ 7m Fire extinguisher
Fuel tank	Built in the base frame with cap, for 8 hours autonomy
Exhaust silencer	Industrial type

Max dimensions (mm): L2850 x W1700 x H1720
Max weight (kg): 2200 approx

Please contact our technical dept. after the order for definitive dimensions and weight.

Specifications ref.: IATA AHM N0s: 904, 905, 910, 913, 915, 972; SAE ARP 5015; ISO 6858:2017; ISO 461-1 and ISO461-2

ALTERNATOR

Power	23 kVA
Cos phi	1
Authorized overload	110% of rated load for 1 hour in a 6 hours period 200% of rated load for 10sec
Type	brushless
Mechanical protection	IP 23
Insulation	Class H
Voltage regulation	Electronic
Engine coupling	Single bearing

CONTROL PANEL

Fitting	On the rear side
Protection	IP 54
Electronic device	Programmable electronic device with backlight digital display. All measures are shown by scrolling pages through built-in buttons. Any alarm latched is displayed with description text.
Measure	**Engine**: oil pressure, water temperature, water level, fuel level, speed, battery voltage, hour counter, alternator battery charger. **28Vdc output**: voltage, current
Protections: alarms control and automatic shutdown	Pre-configured and editable (through built-in buttons or software) thresholds, each one with its activation delay time: Engine: low oil pressure, high water temperature, low fuel level, overspeed, underspeed, alternator battery charger failure. 28Vdc output: over/under voltage, overcurrent
User switches/ buttons	Power supply ON-OFF. Power output activation/ deactivation (for each output line) Flashing light ON/OFF Potentiometer

WINTER KIT (ON REQUEST)

Fuel tank	Fuel tank preheating with internal coil for engine water circulator, supplied by 230V, 50Hz external power supply (during storage inside hangars)
Engine	Engine water preheating, supplied by 230V, 50Hz external power supply (during storage inside hangars) Engine air preheating, powered at 24V (during storage inside hangars)
Battery heaters	Battery heater, supplied by 230V, 50Hz external power supply (during storage inside hangars)

TECHNICAL DOCUMENTS

Engine	Operation and maintenance technical manual
Alternator	Operation and maintenance technical manual
Control panel	Wiring diagram Printed label fixed on rear side (under the control panel) for a quick start & use of GPU
GPU	Operation and maintenance manual

bertoli POWER UNITS
www.bertolisrl.it • info@bertolisrl.it
+39 0521 86 13 86